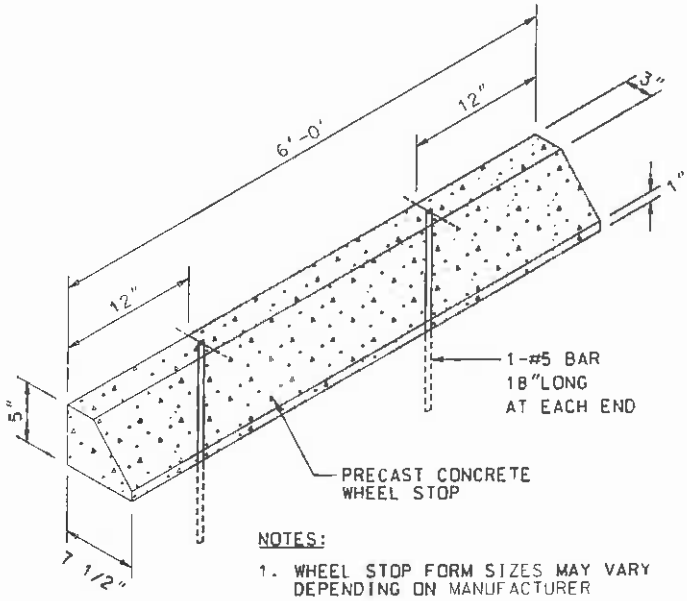


NOTES:

1. WHEEL STOP FORM SIZES MAY VARY DEPENDING ON MANUFACTURER
2. CONCRETE STRENGTH SHALL BE 3.000 P.S.I.

# WHEEL STOP DETAIL

| No. | Date | Revisions Remarks | By |
|---|---|---|---|
| | | | |

Date: 06/11/2008 11/12/09

Scale:

WHEEL STOP

STANDARD DETAILS

CITY OF PLANTATION, BROWARD COUNTY, FLORIDA